Face Haulers

Product Line

Power and Performance

Face haulage – the transport of mined coal from the working face to the conveyor belt – is a key factor in underground mine efficiency, particularly in room & pillar operations. As a world-leading supplier of room & pillar technology, we have outstanding experience in the development and design of rubber-tired vehicles, including both battery and diesel-powered face haulers. As a result, you can choose from a range of face haulers designed to provide optimal carrying capacity and efficent haulage routes in different mine layouts.

Unlimited Flexibility

Caterpillar offers a line of high-capacity, highly-reliable battery- and diesel-powered face haulers. Whether they're replacing outdated shuttle cars or current cordless haulers, these offer the most competitive choice for increased productivity.

Freedom of Movement

Cableless face haulers have several advantages over cable-driven shuttle cars: They have greater freedom of movement as there are no trailing cables, and travel is not restricted by cable length, typically 200 meters or less. They can travel and unload faster than shuttle cars, carry a 15–20% greater payload and operate in narrow roadways with tighter turns.

Packed with Power

Because of their superior productivity and flexibility, Caterpillar has focused on battery- and diesel-powered face haulers. Each offers distinct advantages. All machines combine compact power, capacity and maneuverability with long-term availability and efficiency.

The Clean Air Act

Cat® battery-powered face haulers do not burden the mine environment with emissions or heat. Due to infinitely variable power control, they are the ideal vehicle for conditions where heat, emissions and noise would impact work and where a flexible vehicle is needed.

As the world leader in battery-powered vehicles for the underground mining industry, we take pride in providing the world's most advanced battery-powered face haulers. Innovative solutions in power control and transmission contribute to making maximum use of battery power.

Diesel Efficiency

Cat diesel face haulers incorporate the most efficient engines and powertrains available while boasting the lowest level of general body emissions among underground diesel vehicles. Many proprietary developments – such as dry scrubber and wet bath exhaust systems with diesel particulate filtration and horizontal or vertical configuration cooling radiators – make Cat diesel face haulers a safe and powerful solution for your room & pillar operations.

FH120 face hauler

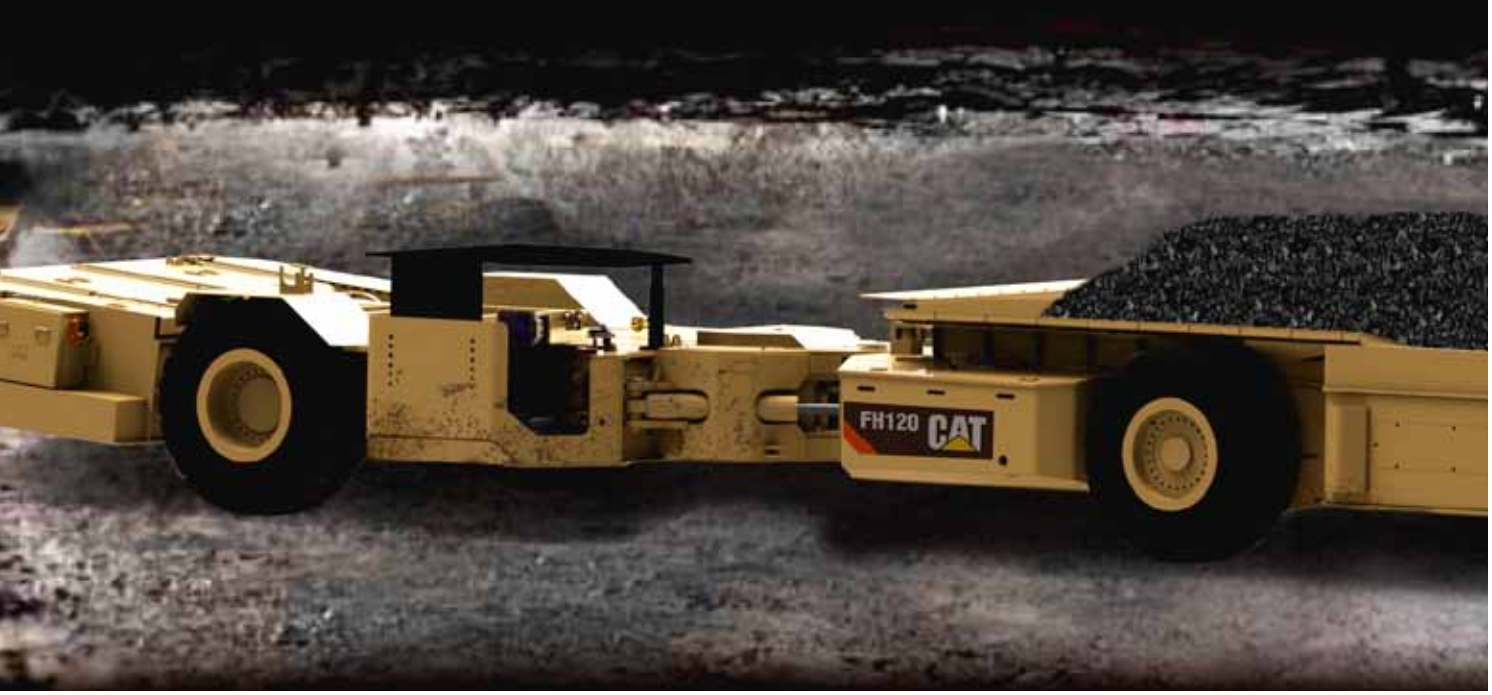

FH110 and FH120 Battery Powered Face Haulers

State-of-the-Art Drive Technology

Since their introduction, Cat face haulers have led the industry with state-of-the-art drive technology. The latest Caterpillar innovation is the HiPAC 10 VFD control system, which drives the motive traction and hydraulic systems, and provides the operator with machine management information. The HiPAC 10 is a DC-to-AC variable-frequency inverter control that drives high-performance AC electric motors, which have superior speed-torque characteristics. It is up to 14% more efficient than traditional DC motors. This means higher loaded tram speeds, more responsive hydraulic functions, and more material hauled per battery charge. The HiPAC 10-machine management system speeds fault diagnosis, allowing rapid repairs and maximizing uptime. The new user interface can display data such as drive unit temperatures and distance traveled per battery charge.

Features

- Each design maximizes payloads in a given seam height.
- True tracking geometry improves maneuverability and decreases haulage cycle time.
- The Cat HiPAC 10 VFD drive system increases empty and loaded ground speed, improving haulage cycle time, delivering more work per battery charge and providing a machine management system.
- No trailing cables means unlimited flexibility when traversing the mine and getting to and from the face.
- Operators are comfortably and safely enclosed in a thick steel compartment with clear visibility to front and rear.
- Face haulers are powered by the East Penn Deka battery which provides the highest level of performance and productivity.

FH120 face hauler

Ergonomically-designed Cockpits

The operator's compartment provides a safe and comfortable working environment. Clear lines of sight are provided to the front, back, and sides. The ergonomic control stick gives the operator intuitive one-hand control of tram direction, lights, parking brake, four-wheel assist and pump motor start. The operator's display has been upgraded to show all operating parameters at a glance, with provision for fault analysis and data logging.

Frame Design

Ruggedness and durability are the key elements in the life of a battery-powered hauler. Through the use of Finite Element Analysis, each Cat frame is designed for maximum strength without adding power-robbing weight. In the new FH120, the driving wheels are an equal distance from the articulation pivot, allowing precision true tracking of front and rear wheels. The resulting elimination of wheel scuff increases tire life and improves efficiency. It also enhances maneuverability, as the hopper section will fit within the same area as the tractor section.

Heavy-Duty Ball Bearing Center Section

Cat face haulers offer the strongest center sections in the market and superior oscillation in tough conditions. The rolling-element oscillation bearing ensures smooth ground-contour following of driven wheels for maximum traction. The connecting plates for the bearing are manufactured from high-strength ASTM A514 steel, ensuring a strong and reliable articulation joint. The FH120 face hauler boasts a 240% increase in bolt moment capacity.

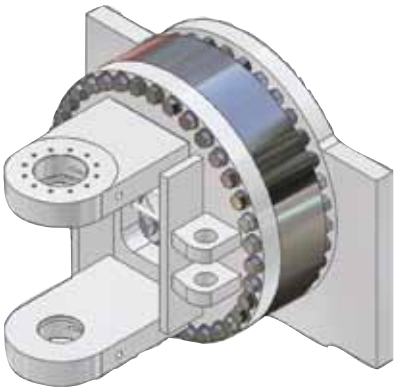

Proven Mine Duty Drivetrain

Cat face haulers feature dual 56 kW (75 hp) AC 3 phase motors. In addition to improved performance and power efficiency, AC motors eliminate the need for DC commutators and brush riggings, cutting operating costs and downtime. Two proprietary double reduction, parallel gear reducers equipped with multiple wet disc brakes connect to the planetary wheel ends.

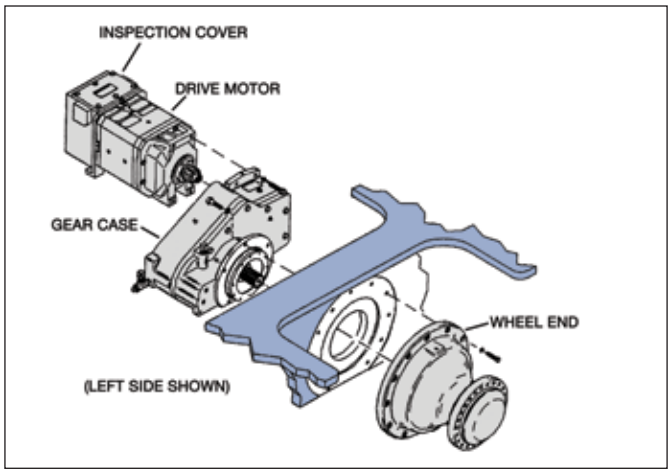

Batteries are available from 190 kWh to 270 kWh

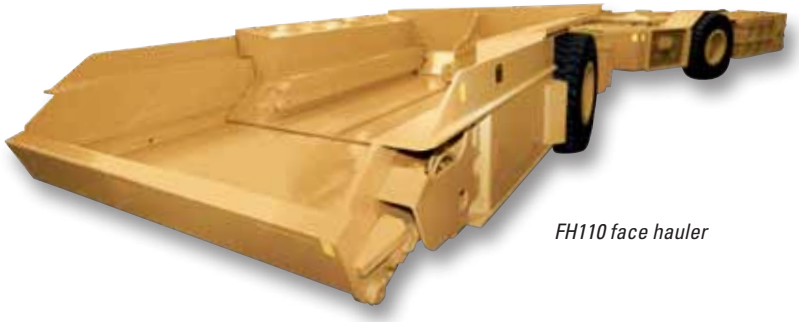

FH110 face hauler

One Powerful Package

Batteries are available from 190 kWh to 270 kWh

The Cat East Penn battery is built for the long run, providing the lowest cost of ownership in the industry. Specially formulated premium-grade lead oxide is used in the flat plate design and each plate is individually formed prior to cell assembly, which assures uniform performance and maximization of amp-hour capacity. State-of-the-art computerized equipment is utilized in every phase of the production process, and stringent quality checks are made on each battery to ensure the highest level of performance.

Deeper Cuts from Supported Roof

By design, Cat face haulers provide unsurpassed depth-of-cut access to the miner for maximum production, while maintaining a safe environment.

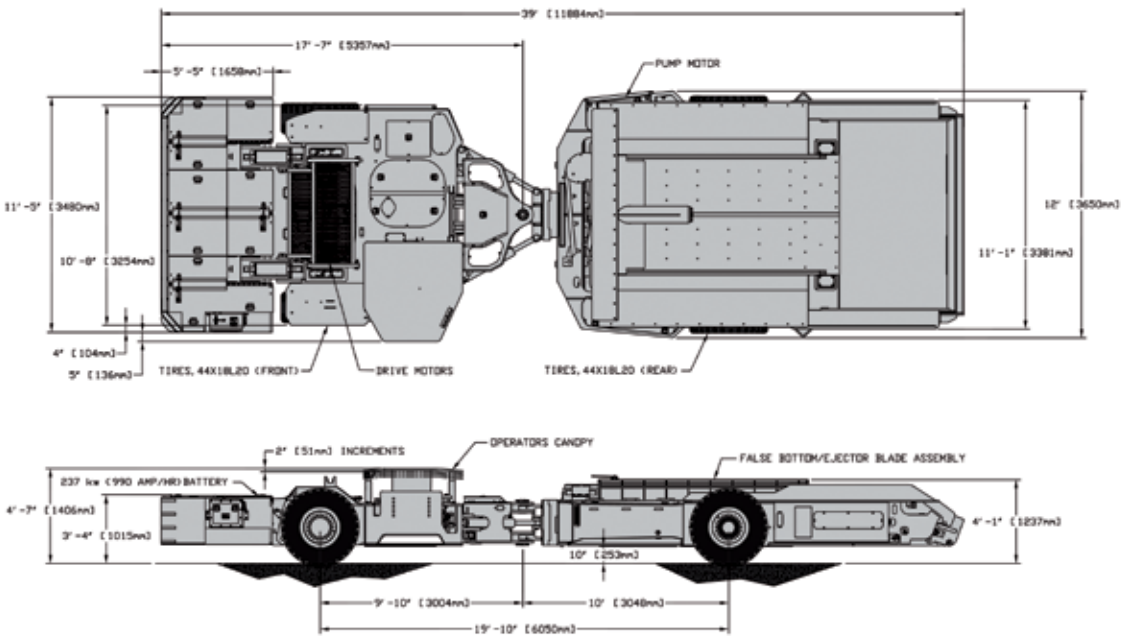

FH125 D Diesel Face Hauler

Diesel face haulers offer a number of unique advantages: true run-of-mine capability, unrestricted movement and the ability to operate in any panel configuration. They are lighter than battery-powered haulers, but have the same capacity with lower ground pressure and tire costs.

High Reliability, Low Cost

To ensure low life-cycle costs and high availability, all vehicles use tried-and-tested, commercially available powertrain components offering high reliability, availability and fuel economy. Components meet or exceed operational and design requirements.

Powerful

Powerful diesel engines ensure maximum power in a compact design. All machines can be supplied with various diesel engine packages suited to the customer's requirements. Like all components, our engines are industry-recognized and accepted. This means high quality, excellent spare parts support and, as a result, high service availability.

Highly Maneuverable

The vehicles feature a central articulation joint that combines oscillation and articulation with optimum maneuverability and stability.

Features

- Up to 20 tonnes (22 tons) maximum payload.
- Certified power packages with state-of-the-art dry scrubber system and DPM filtration.
- Rugged, reliable drive unit with chainless drive system.
- Quick-response hydraulic steering and true tracking geometry provide optimum maneuverability.
- Fully encapsulated 6-plate, wet-running disc brakes.
- Cockpit positioned for optimum visibility and protection.
- Electronic safety system with automatic cutoff.
- Additional rear gate.
- High-powered, low-emission vehicle featuring 30% lower heat generation.

FH125 D diesel face hauler

Compact and Rugged

Space is at a premium in underground roadways, so the FH125 D is designed to be compact with a minimal profile and roadway presence. It is also designed to be cost-effective in operation and to meet the user's need for the safest maximum possible capacity, speed and power.

Engineering excellence with computer-assisted, mine-specific design; Finite Element Analysis; quality assurance at every stage; and the use of high-performance components and materials ensure that your vehicle is built for long service life in the harshest of mining environments.

Environmentally Responsible

Because it works underground, the FH125 D is designed for minimum heat generation and emissions with exhaust cooling and particulate filtering systems that meet the highest international legislative standards.

Operator Safety and Comfort

The cockpit design features intuitive, ergonomic controls and optimum visibility and safety. All vehicles are compliant with current and anticipated future safety requirements, such as exhaust filtering, falling object protection and maximized visibility.

FH125 D operator's compartment

Compliance

Compliance to regional regulations and guidelines is achieved by using a variety of engine and exhaust conditioner packages. Cat equipment is compliant with Australian Standard MDG guidelines, MSHA (USA), MA (China) and DGMS (India) legislative regulations for underground coal mining, including fire shutdown, exhaust emission sampling and brake standards.

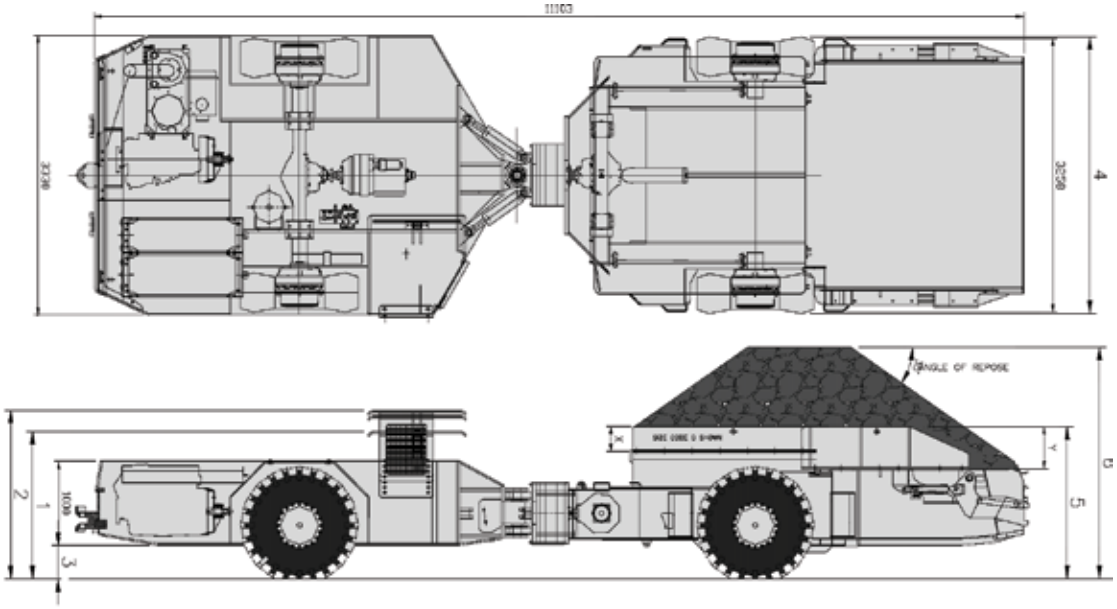

FH125 D tractor unit

Cooling Systems

Caterpillar offers the option of radiator units in either vertical or horizontal configurations. The dry scrubber exhaust system features a dual independent cooling system with one for the exhaust system and another for the engine system, providing a balanced coolant flow through both systems. The wet-bath-exhaust-equipped machine has a single cooling system for the engine cooling and the exhaust gas cooled by constant consumption from the exhaust scrubber reservoir.

Electrical System

The base specification FH125 D electrics consist of four flameproof lights powered by a flameproof Cat alternator and Cat DCS intrinsically safe engine-monitoring and shutdown system. There are a number of additional options available for explosion or non-explosion protected machines that include:

- LCD graphical display in flameproof enclosure
- Dimming and directional control of the lights
- Solenoid-operated valve banks with spool monitoring
- Electronic shift transmission
- 12 V or 24 V electrical system
- Reversing camera and display in flameproof enclosure
- Electronic joystick control of hydraulics

Ease of Service

All Cat diesel machines can have their operation safety checks performed by the operator in minutes at the beginning of the shift. Easily accessible components such as the flame trap, exhaust filter and check points ensure that regular maintenance is a simple and trouble-free five-minute job for the operator. The FH125 D shares many components with other Cat vehicles, allowing reduced inventories of spare parts and consumables.

Easy access to daily service points

Solid Drivelines

The FH125 D diesel face hauler features solid drivelines to front and rear wheels, offering improved characteristics over hydraulic or chain drive systems. Caterpillar uses the same model axle in the hopper unit as used in the tractor unit, with 90 degree transfer boxes mounted on the axle and wheel ends and are connected by a solid drive shaft. For safety, ease of maintenance and to reduce wear on the vehicle‘s drive train, the POSI STOP brakes are situated within the wheel hub. Locating the wheels equidistant from the articulation joint allows the FH125 D to offer true tracking four-wheel-drive, with front and rear wheels following the same path.

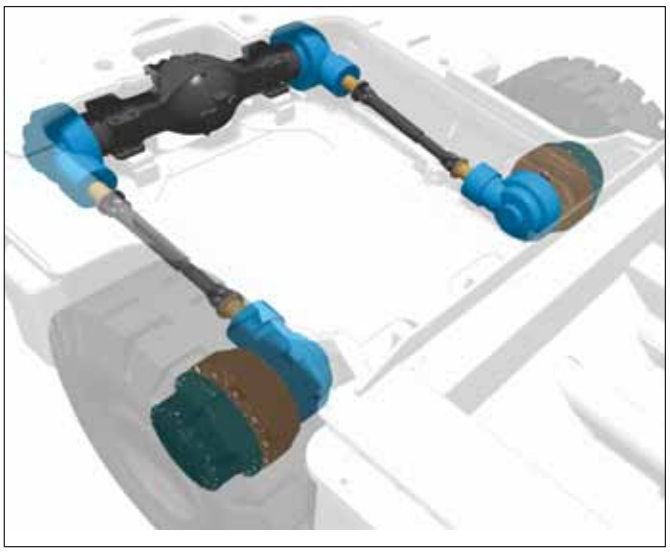

General Specifications

	FH125 D	Battery Powered	
		FH110	FH120
Overall Length (with tailgate):	10.86 m (35 ft 7.5 in)	11.89 m (39 ft)	12.32 m (40 ft 5 in)
Overall Width	3.3 m (10 ft 11 in)	3.66 m (12 ft)	3.41 m (11 ft 2 in)
Empty Weight:	20 tonnes (22 tons)	37.2 tonnes (41 tons)	38.6 tonnes (42.5 tons)
Operating Height	1.80 m (5 ft 11 in)	0.99–1.52 m (39–60 in)	1.40–2.00 m (55–80 in)
Max. Carrying Capacity	20 tonnes (22 tons) 15 m^3 (530 ft^3)	9 tonnes (10 tons) 15 m^3 (530 ft^3)	20 tonnes (22 tons) 10m^3 (344 ft^3)
Ground Clearance	400 mm (16 in)	w254 or 305 mm (10 or 12 in)	305, 356 mm (12 or 14 in)
Wheel/Tyres	17.5 x R25	889 or 965 mm (35 or 38 in)	1 118 , 1 270 mm (44 or 50 in)
Max. Tram Speed	24 km/h (15 mph)	8 km/h (5 mph)	9.65 km/h (6 mph)
		Note: On DC-powered machines speed will vary depending upon drive ratios.	
Load Discharge Time	22 sec.	24 sec.	24 sec.
Engine	6-cylinder turbocharged 4-cycle Diesel engine	N/A	N/A
Power	171 kW (230 hp)	Dual 26 kW (35 hp) DC motors	Dual 56 kW (75 hp) AC motors
Optional Features	Dry or wet scrubber system Tires – 20.5 x R25 Bolt-on, custom height sideboards Powerfill Automatic fire suppression Methane monitoring and shutdown Operator's cab heights	Battery plugs/change cables/receptacles Chargers Batteries motor speed cutback Controller protective guarding Pump motor protective guarding Wheel guarding Canopy extension adapters Powerfill	Sideboards Battery plugs/change cables/receptacles Chargers Batteries Controller protective guarding Pump motor protective guarding Canopy extension adapters

For more complete information on Cat products, dealer services, and industry solutions, visit us on the web at **mining.cat.com** and **www.cat.com**

© 2011 Caterpillar Inc.
All rights reserved

AEXQ0611

Materials and specifications are subject to change without notice. Featured machines in photos may include additional equipment. See your Cat dealer for available options.

CAT, CATERPILLAR, their respective logos, “Caterpillar Yellow” and the “Power Edge” trade dress, as well as corporate and product identity used herein, are trademarks of Caterpillar and may not be used without permission.