Cat®
MD1003 P

Pneumatic Shaft Jumbo Drill

Specifications

Features

Overall Length (with TR 12 ft Feed, SJ105 Boom)	9.5 m	31.2 ft
Overall Frame Dimensions 3 Booms	1.93 m Min. Dia. × 2.28 m LG 76 in Min. Dia. × 90 in LG	

Hydraulic System (per Boom)

One Gear Pump – Powers Feed and Boom Functions		
Hydraulic Reservoir	170 L	40 gal
Oil to Water Heat Exchanger		
Power Unit	RM510 Air Motor	

Drifter (S36)

Model (Qty. 3)	S36	
Weight	120 kg	265 lb
Impact Frequency	27 Hz	1,620 bmp
Rotation Speed	140 rpm	

Boom

Models		
Face Coverage Diameter (MD-105-SD) per Boom	10 m	32.83 ft
Face Coverage Diameter (MD-135-SD) per Boom	11.59 m	38 ft

Feed

Model (Qty. 3)	TR12	
Steel Length	3.66 m	12 ft
Maximum Hole Depth	3.20 m	10.5 ft
Overall Length	5.49 m	18 ft

Optional Equipment

- Model TR14-TR20 (heavy aluminum) Feed for 4.27-6.09 m (14-20 ft) steel length in lieu of TR16 Feed
- Hydraulic opening fixed centralizer (for probing)
- 0.91 m (3 ft) Stinger Extension
- Spare Drifter

Pneumatic Shaft Jumbo Drill – MD1003 P

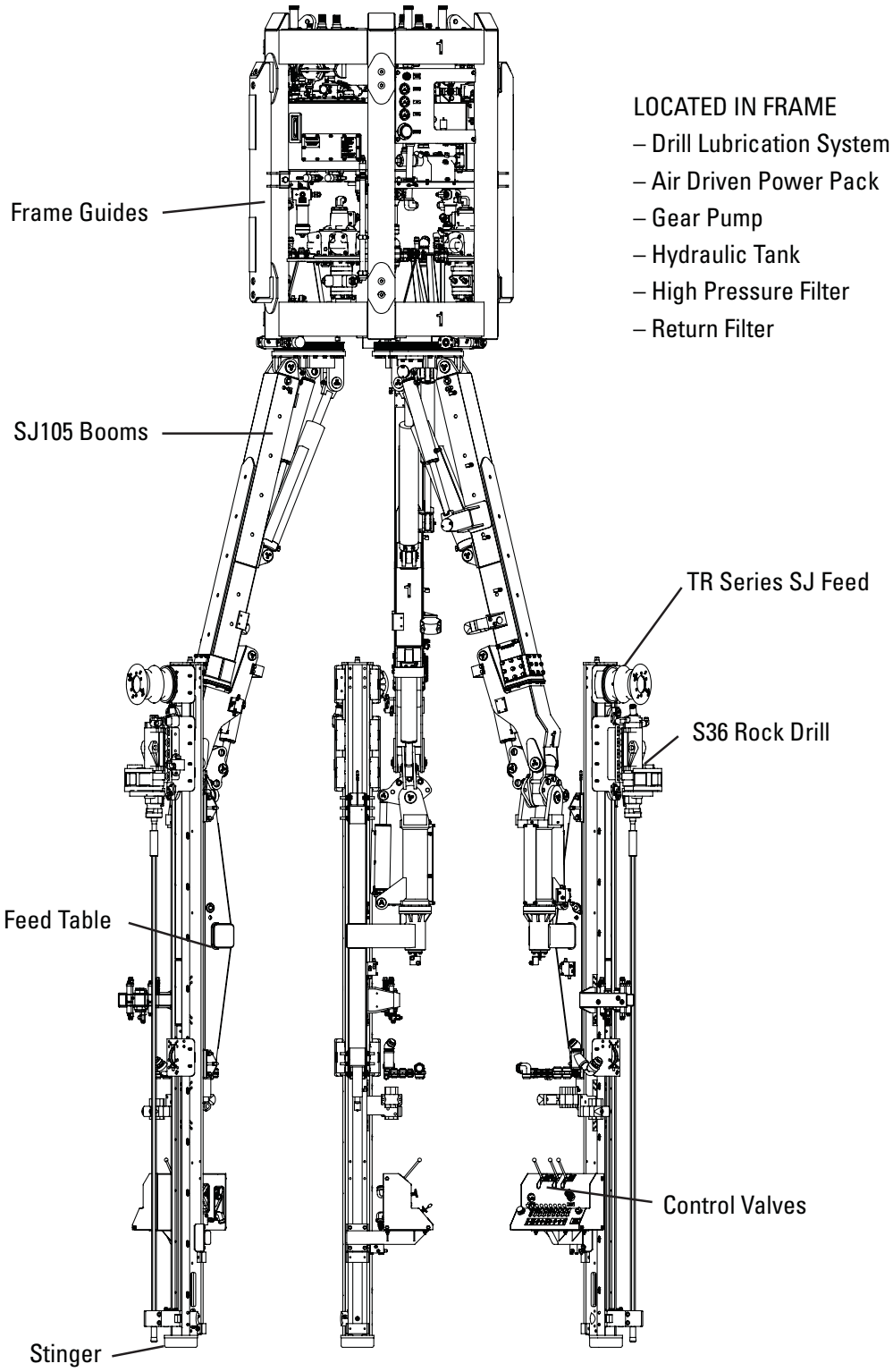

LOCATED IN FRAME
- Drill Lubrication System
- Air Driven Power Pack
- Gear Pump
- Hydraulic Tank
- High Pressure Filter
- Return Filter

For more complete information on Cat products, dealer services, and industry solutions, visit us on the web at www.cat.com

© 2013 Caterpillar Inc.
All Rights Reserved
Printed in U.S.A.

AEHQ6695-02 (07-13)
Replaces AEHQ6695-01

Materials and specifications are subject to change without notice. Featured machines in photos may include additional equipment. See your Cat dealer for available options.

CAT, CATERPILLAR, SAFETY.CAT.COM, their respective logos, “Caterpillar Yellow” and the “Power Edge” trade dress, as well as corporate and product identity used herein, are trademarks of Caterpillar and may not be used without permission.